CEREST
Ingénierie Industrielle - Machines spéciales



STANDALONE FORMING MACHINE

● **Mechanical engineering** ● **Realizations** ○ **Cabling** ○ **Machines**

This molding machine serves as a mold for encasing a polyurethane-insulated tank (such as a water heater tank).

The operator positions the tank (with the plug in place) on three pins at the base of the fixed half-shell.

He manually closes the pivoting half-shell.

He lowers the lid using a crank located at the rear.

Next, they secure the components using several clamping clamps to ensure a tight seal.

Then they inject the mixture through a port provided for this purpose.

After the polyurethane has cured, the operator opens the mold half to remove the insulated tank.

FEATURES:

- Height = 2170 mm
- Width = 1800 mm
- Depth = 1500 mm
- Weight = 700 kg
- Tank diameter = 650 mm

- Tank height = 1700 mm

CEREST
20 Rue des Frères Lumiere
68000 Colmar - FRANCE

EMAIL
cerest@cerest.com

PHONE
+33 (0)3.89.21.02.56

INTERNET
www.cerest.com



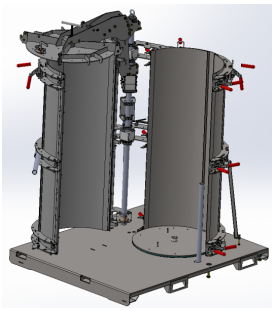

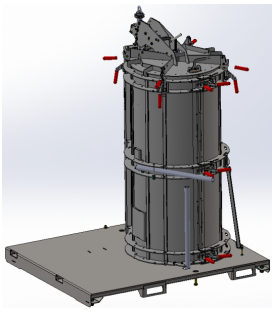

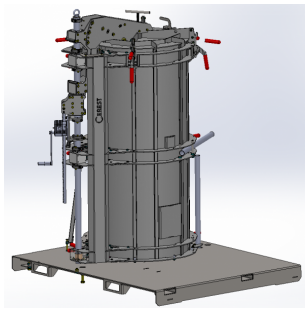

Reference : 3878

Project added the 11/05/26

CEREST
20 Rue des Frères Lumiere
68000 Colmar - FRANCE

EMAIL
cerest@cerest.com

PHONE
+33 (0)3.89.21.02.56

INTERNET
www.cerest.com